PARTS LIST			
ITEM	QTY	PART NUMBER	DESCRIPTION
1	1	Drive Plate Outer	
2	2	Drive Axles	
3	14	Screw 8-32 Steel 2.500	
4	5	F604ZZ	F604ZZ
5	3	18t Test Gear	
6	2	Full 3.25 with IQ rollers	
7	5		STEP AP203
8	2	assembl y	
9	2	Drive Axles Traction	
10	2	Omni Spacer	
11	2	Traction Spacer	
12	1	Nut 8-32 THIN Nylock	Nylock nuts have internal nylon lock.
13	5	LS Motor Axle Nozzle	
14	5	Nylon Spacer .375 OD-.125	
15	1	Finalized Inner Drive Plate - Collin_M IR	

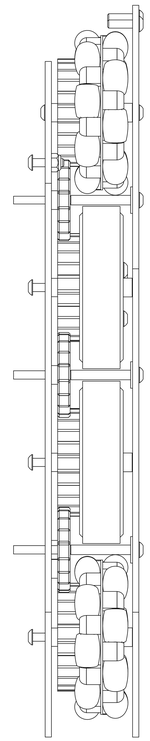

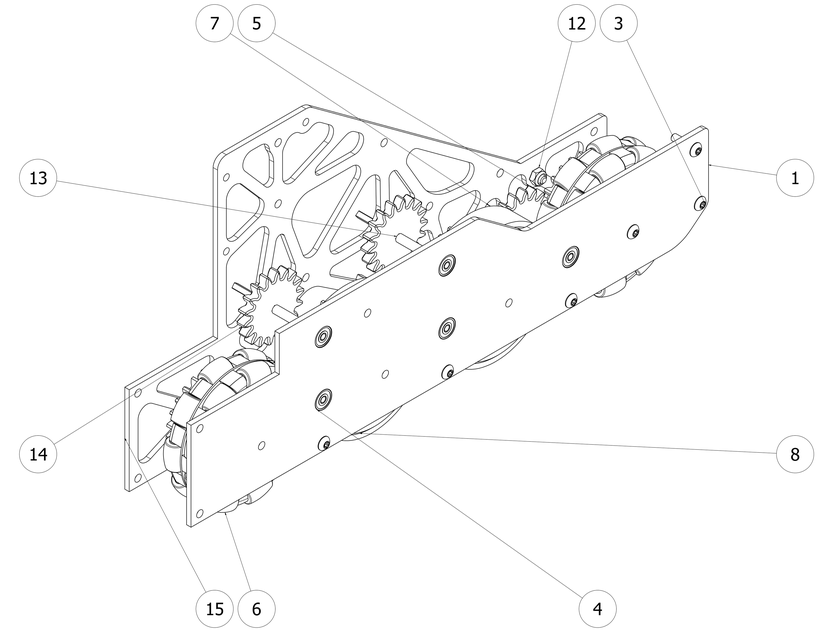

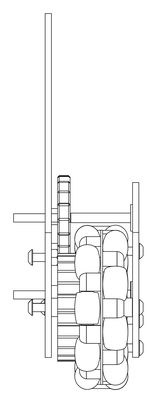

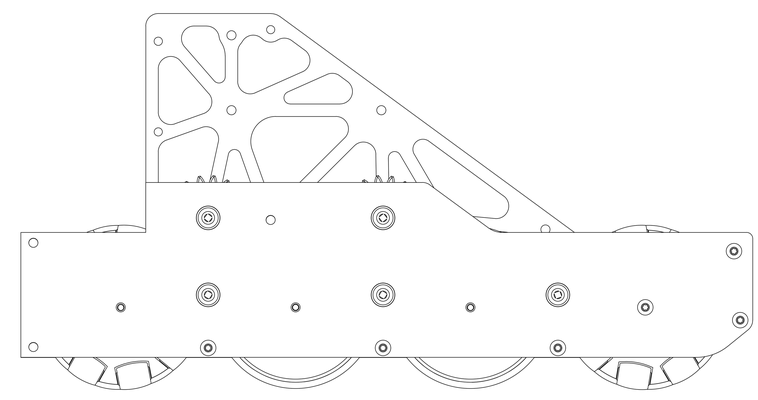

This drawing is the sole property of Arkansas Tech University. It is provided on the condition that it will not be used in any way that is harmful to the university's interests.
By accepting or using this drawing, you agree to this condition and acknowledge Arkansas Tech University's exclusive ownership.

TOLERANCES: UNLESS OTHERWISE SPECIFIED	
NO DECIMAL	X. ± 1
1 PLACE DECIMAL	X. X ± .03
2 PLACE DECIMAL	X.XX ± .01
3 PLACE DECIMAL	X.XXX ± .005
ANGLES	X° ± 15'

Both Drive Sides

DRAWN: DATE:
CHECKED: SCALE:

SHEET: